Tetra Plex® C

Plate heat exchangers

Application

Pasteurisation and general cooling/heating of dairy, beverage, viscous and other liquid food products.

Working principle

A plate heat exchanger consists of a pack of corrugated metal plates with portholes for the passage of two fluids between which heat transfer will take place.

The plate pack is assembled between a frame plate and a pressure plate and compressed by tightening bolts.

The plates are fitted with a gasket which seals the channel and directs the fluids into alternate channels. The number of plates are determined by the flow rate, physical properties of the fluids, pressure drop and temperature program. The plate corrugations promote fluid turbulence and support the plates against differential pressure.

Frame design

The plates and the pressure plate are suspended from an upper carrying bar and located by a lower guiding bar, both of which are fixed to the support column. The tightening bolts are equipped with ball bearing washers in order to facilitate opening and closing of the unit. The frame and support column have adjustable feet.

One unit can contain several heat exchangers, separated by connection plates with interchangeable connections.

Plate design

The corrugation of the plates provides a passage between the plates, supports each plate against the adjacent one and enhances the turbulence, resulting in efficient heat transfer. Corner ports and gaskets are arranged so that the two media flow through alternate channels.

The plates have a chevron pattern for maximum strength at high working pressures. Different chevron designs are available, in order to obtain optimal heat transfer and low pressure drop.

A unique distribution area provides an even flow over the

Tetra Pak

protects what's good™

Tetra Plex® C – plate heat exchangers

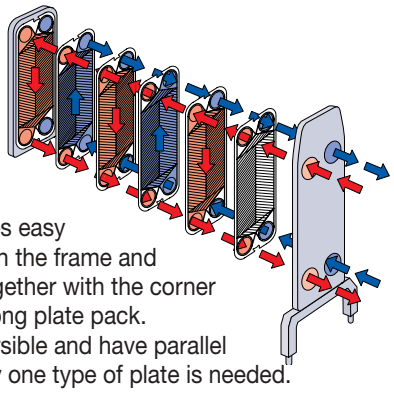

Flow principle of a Tetra Plex C plate heat exchanger

plate surface. The hanging system enables easy handling of the plates in the frame and the hanging system together with the corner guiding results in a strong plate pack.

The plates are reversible and have parallel flow, which means only one type of plate is needed.

Gasket design

The plates are supplied with glue-free Clip-On gaskets. The Clip-On gaskets are easy to replace even with the plates still hanging in the frame.

Standard materials

Plates

Stainless steel AISI 316 with bright annealed finish, titanium or SMO.

Gaskets

Nitrile-FDA, High Temperature Nitrile-FDA or EPDM-FDA. Clip-On design.

Frame

Frame and pressure plate in solid stainless steel. Connection plates of mild steel, clad with stainless steel in glass blasted finish. All wetted parts in acid proof stainless steel. Outer surfaces in various grades of stainless steel. Movable nuts on tightening bolts in chromium plated brass.

Optional

- Thermometer pocket and nib with ventilation cock[1)]
- Thermometer pocket[1)]
- Connection for 51 mm pressure transmitter[1)]
- Protection sheet
- Bolt protections of stainless steel
- 3-A finish
- Connections in titanium or SMO (frame and pressure plate)
- Extended legs
- Extra standard wrench or pneumatic tightening tool
- Commissioning kit, gaskets
- Test certificates and material certificate
- Testing by authorised inspection companies

All options are not available on all models

[1)] At through pass corners in connection plates

Environmental issues

The amount of energy consumed is depending on the duty the specific heat exchanger is performing. Utility consumption and heat recovery is optimised for each specific case. Please ask for detailed information when you receive a quotation.

The Tetra Plex heat exchangers are built in a modular design, which makes them easy to rebuild and adapt for new applications.

The Tetra Plex heat exchangers consist of parts that can be separated for recycling purposes.

Technical data

Connections

DIN, SMS, TRI-CLAMP, B.S./RJT and IDF/ISO male parts. Others on request.

Max. working pressure

Frame SR – 1,0 MPa (10 bar) overpressure
Frame SM – 1,6 MPa (16 bar) overpressure
Frame SH – 2,1 MPa (21 bar) overpressure

Complies with PED 97/23/EC.

Dimensions

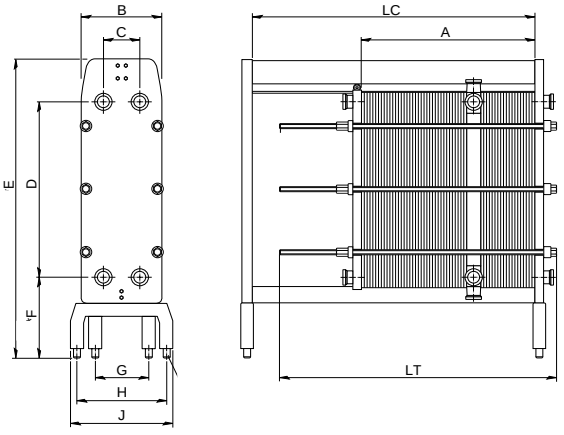

Overall length, LC, as well as A and LT, vary depending on number of plates and connecting plates. Recommended free space around the unit is 1,5 meter at sides and frame head end.

	Tetra Plex C6	Tetra Plex C8	Tetra Plex C10
Measurements, mm			
B	370	500	670
C	129	220	324
D	859	1 095	1324
E	1 420*	1 850*	2 160*
F	400*	500*	500*
G	240	320	320
H	460	590	750
J	520	670	830
*Adjustable feet ± 40 mm			
Connection			
Diameter, mm	51	76	76/101,6
Plates			
Plate pattern	Chevron	Chevron	Chevron
Surface, m²	0,18	0,38	0,62
Overall dimensions, mm	1 000 x 250	1 250 x 375	1 500 x 500
Port dimensions, mm	55	80	105
Thickness, mm	0,5/0,6/0,7	0,5/0,6/0,7	0,5/0,6/0,7
Capacity			
Pasteurisation, l/h	15 000	35 000	65 000
Heating/Cooling, l/h	15 000	35 000	65 000
Water, l/h	30 000	75 000	130 000

Tetra Pak

We reserve the right to introduce design modifications without prior notice. Tetra Pak, , protects what's good and Tetra Plex are trademarks belonging to the Tetra Pak Group.

Teknotext AB
Code PD 63504 en2 04-03

© 2004 Tetra Pak Processing Components AB, Lund, Sweden.