TETRA PAK® CHEESE VAT OO SH9

Curd-making vat for semi-hard cheeses

HIGHLIGHTS

- Wide range of cheese types
- Up to 60 % whey pre-draw of nominal filling level
- Excellent cutting and stirring performance
- High vat performance at any fill level
- Outstanding emptying capability

APPLICATION

The Tetra Pak® Cheese Vat OO SH9 is specifically designed for the production of high quality semi-hard types of cheese. It has all required functions for a controlled and predictable process, including cheese milk filling, ingredient mixing, milk coagulation, coagulum cutting, stirring, whey discharge, water addition, emptying and Cleaning in Place (CIP).

The design of the Tetra Pak® Cheese Vat OO SH9 is based on the double circle principle, which ensures an optimal and efficient, yet careful, treatment of the cheese curd.

WORKING PRINCIPLE

First, add milk, starter culture and rennet to the vat. Then, the rotation of the combined cutting and stirring frame gently mixes all the ingredients. After proper coagulation time, the curd is cut to the right curd particle size. The vat then gently stirs the curd and whey mixture and whey pre-draw is possible at this point if desired.

A tubular whey strainer with a pivoted pipe connection is suspended from the top of the vat. The strainer is immersed just below liquid level for efficient whey drainage.

The vat is equipped with a dimple jacket on the bottom cones, to facilitate heating and/or cooling of the product with water.

When the cheese reaches the right firmness, the curd and whey mixture empties through the double outlet. The conical bottom design ensures outstanding emptying performance, thus minimizing the need for flushing.

CAPACITY

The Tetra Pak® Cheese Vat OO SH9 is available in the following sizes (nominal filling volume in litres):

- 11 000, 14 000, 19 000
- 8.000, 24.000 and 30.000 ltr available on request

SCOPE OF SUPPLY

- Vertical cylindrical double O shaped body with cone bottoms
- Dimple jacket on both cone bottoms
- Water supply manifold to both dimple jackets
- Two shafts with welded-on knife frames and stirring blades
- Frequency-controlled E-motor (IE3) for cutting/stirring tool
- Whey strainer (80 m³/h) with E-motor (IE1) and gearbox
- Internal LED lighting
- Manhole with non-transparent sliding door on top position
- Air vent
- CIP nozzles with interconnecting pipe work
- Temperature electrode
- Two level electrodes (LL)
- Two curd-whey outlets/milk inlets, with valves
- Outlet manifold
- Adjustable legs (-50/+100 mm)
- Sanitary DIN 11864 couplings
- Siemens-based control system
- Operator panel
- Control panel
- MCC panel

OPTIONS

MECHANICAL

- 01 Top milk inlet
- 03 Flexible knife configuration
- 06 Extra level electrode
- 07 Content measurement
- 21 Coagulation sensor
- 22 Cordless whey sieve
- 25 Outlet manifold with T-piece for water flush

AUTOMATION

- 32 I/O communication (hardwired communication)
- 35 Operator panel in non-EU language

CONSUMPTION DATA

Capacity, litres	11-19
CIP supply	45m³/h
Electricity	4kVA
Compressed air	1NL/h
Heating water*	25 m³/h

*Dependent on required heating rate and ΔT.
Values are average and subject to process parameters.

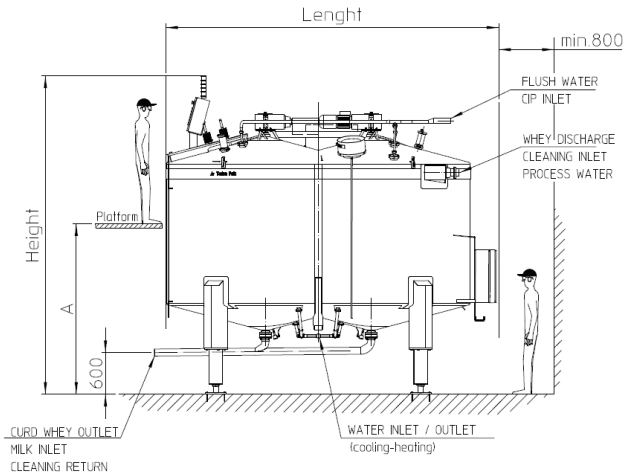

DIMENSIONS AND SHIPPING DATA

SIZE Litres	L x W x H (m)	A mm	WEIGHT net kg	LOAD pro leg	L x W x H unpacked approx (m)	L x W x H seaworthy case (m)	WEIGHT gross kg
6 000	4.3 x 2.55 x 3.85	1 400	3 200	2 300	4.8 x 2.7 x 2.4	5.1 x 3.0 x 2.7	4 200
8 000	4.3 x 2.55 x 4.1	1 650	3 400	2 850	4.8 x 2.7 x 2.7	5.1 x 3.0 x 3.0	4 400
11 000	4.8 x 2.9 x 4.15	1 700	3 600	3 650	5.3 x 3.1 x 2.9	5.6 x 3.4 x 3.2	4 800
14 000	4.8 x 2.9 x 4.4	1 950	3 800	4 450	5.3 x 3.1 x 3.1	5.6 x 3.4 x 3.4	5 000
19 000	4.8 x 2.9 x 4.9	2 450	4 000	5 750	5.3 x 3.1 x 3.6	5.6 x 3.4 x 3.9	5 200
24 000	5.4 x 3.25 x 5.0	2 550	4 800	7 200	5.8 x 3.5 x 3.6	6.1 x 3.8 x 3.9	6 300
30 000	5.4 x 3.25 x 5.5	3 050	5 100	8 775	5.8 x 3.5 x 4.1	6.1 x 3.8 x 4.4	6 600